Proceedings of the 2005 IEEE
International Conference on Robotics and Automation
Barcelona, Spain, April 2005

Automatic Error Detection and Reduction for an Odometric Sensor based on Two Optical Mice

Andrea Bonarini, Matteo Matteucci and Marcello Restelli
Department of Electronics and Information
Politecnico di Milano
Piazza Leonardo Da Vinci, 32
20133 Milan, Italy
{*bonarini,matteucci,restelli*}*@elet.polimi.it*

***Abstract*— In this paper, we present a dead reckoning sensor to support reliable odometry on mobile robots. This sensor is based on a pair of optical mice rigidly connected to the robot body and its main advantages are 1) this localization system is independent from the kinematics of the robot, 2) the measurement given by the mice is not subject to slipping, since they are independent from the traction wheels, nor to crawling, since they measure displacements in any direction 3) it is a low-cost solution with a precision comparable to classical shaft encoders. Since we have redundant measures it is possible to detect non-systematic errors; in this paper, an automatic procedure to reduce non-systematic errors of the sensor is presented and validated with experimental results on a real mobile robot.**

I. Introduction

Since the very beginning of mobile robotics, dead reckoning was used to estimate the robot pose, i.e., its position and its orientation with respect to a global reference frame placed in the environment. Dead reckoning is a navigation method based on measurements of distance traveled from a known point used to incrementally update the robot pose. This leads to a relative positioning method, which is simple, cheap and easy to accomplish in real-time. The main disadvantage of dead reckoning is its unbounded accumulation of errors.

The majority of mobile robots use dead reckoning based on wheels velocity in order to perform their navigation tasks (alone or combined with other absolute localization systems [**?**]). Typically, odometry relies on measures of the space covered by the wheels gathered by encoders which can be placed directly on the wheels or on the engine-axis, and then combined in order to compute robot movement along the x and y coordinates of a global frame of reference and its change in orientation. It is well-known that this approach to odometry is subject to:

- *systematic* errors, caused by factors such as unequal wheel-diameters, imprecisely measured wheel diameters or wheel distance [**?**];
- *non-systematic* errors, caused by irregularities of the floor, bumps, cracks or by wheel-slippage.

Despite its intrinsic limitations, many researcher agree that odometry is an important part of a robot navigation system and that navigation tasks is simplified having an improved odometry with very high sample rates providing good short-term accuracy. In [**?**] and [**?**] we have presented a new dead reckoning sensor, based on the measures taken by two optical mice fixed on the bottom of a robot. Such sensor is very robust towards non-systematic errors, and independent from robot's kinematics, since it is not coupled with the driving wheels and it measures the effective robot displacement.

In the following section, we briefly introduce the sensor and describe the geometrical derivation that allows to compute the robot movement on the basis of the readings of the mice. Section III describes a simple procedure to perform error detection and reduction of reading errors in the mice (i.e., non systematic errors) after calibrating the odometry system to reduce systematic errors. Experimental results in order to show the effectiveness of our approach are reported in Section IV while Section V closes the paper by introducing a brief comparison of the system to related works.

II. The odometry sensor and pose estimation

In [**?**] we have presented a very low-cost system which can be easily interfaced with any platform. This sensor requires only two optical mice which can be placed in any position under the robot, and can be connected using the USB interface. This allows to build an accurate dead reckoning system, which can be employed on and ported to all the mobile robots which operate in an environment with a ground that allows the mice to measure the movements (indoor environments typically meet this requirement). In fact, the only issue by using this method is related to excessive missing readings due to a floor with a bad surface or when the distance between the mouse and the ground becomes too large.

From the readings of the two mice it is possible to compute the pose of a mobile robot independently from its kinematics. For sake of ease, in this section, we describe how to estimate the robot pose considering that the mice are placed at a certain distance D, so that they are parallel between them and orthogonal w.r.t. their joining line (see Figure 1). We consider their mid-point as the position of the robot and their direction (i.e., their longitudinal axis pointing toward their buttons) as its orientation. This can be easily relaxed as shown in [**?**].

Each mouse measures its movement along its horizontal and vertical axes. Whenever the robot makes an arc

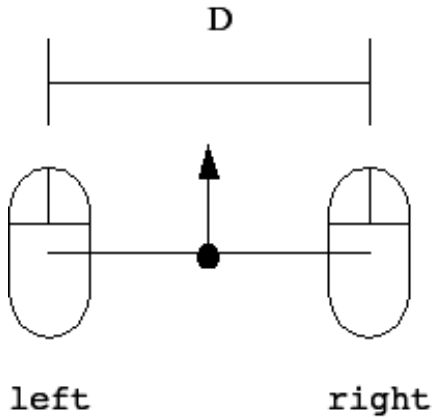

Fig. 1. The relative positioning of the two mice

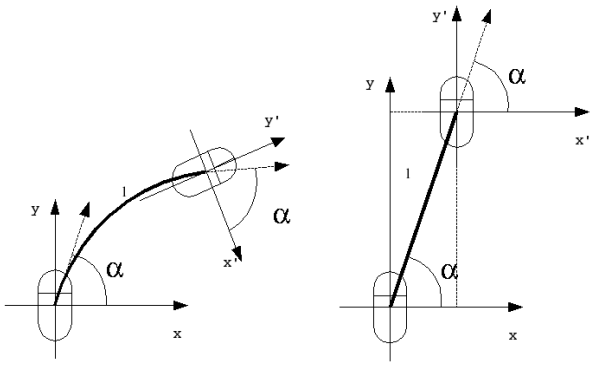

Fig. 2. Two different paths in which the mouse readings are the same

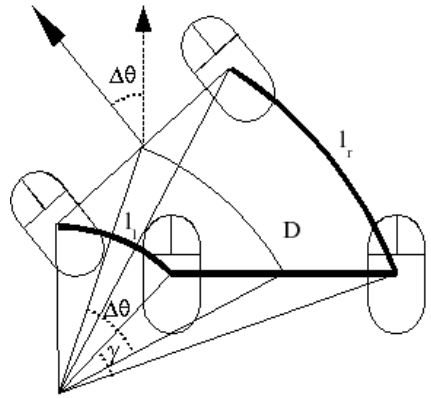

Fig. 3. The angle arc of each mouse is equal to the change in the orientation of the robot

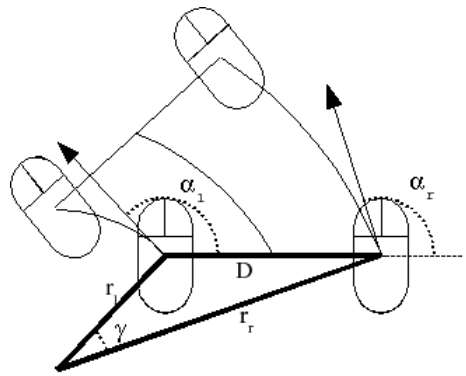

Fig. 4. The triangle made up of the joining lines and the two radii

of circumference, also each mouse will make an arc of circumference, which are characterized by the same center and the same arc angle, but different radius. During the sampling time, the angle α between the x-axis of the mouse and the tangent to its trajectory does not change. This implies that, when a mouse moves along an arc of length l, it measures always the same values independently from the radius of the arc (see Figure 2). So, considering an arc with an infinite radius (i.e., a segment), we can write the following relations between the readings of a mouse $(\overline{x}, \overline{y})$ and its path:

$$\overline{x} = l\cos(\alpha) \quad (1)$$

$$\overline{y} = l\sin(\alpha). \quad (2)$$

From (1) and (2), we can compute both the angle between the x axis of the mouse and the tangent to the arc:

$$\alpha = \arctan\left(\frac{\overline{y}}{\overline{x}}\right), \quad (3)$$

and the length of the covered arc:

$$l = \begin{cases} |\overline{x}|, & \alpha = 0, \pi \\ \frac{\overline{y}}{\sin\alpha}, & otherwise \end{cases} \quad (4)$$

We hypothesize that, during the short sampling period, the robot moves with constant tangential and rotational speeds. This implies that the robot movement during a sampling period can be approximated by an arc of circumference. So, we have to estimate the 3 parameters that describe the arc of circumference (i.e., the x and y coordinates of the center of instantaneous rotation and the rotation angle $\Delta\theta$), given the 4 readings taken from the two mice.

We call $\overline{x}_r$ and $\overline{y}_r$ the measures taken by the mouse on the right, while $\overline{x}_l$ and $\overline{y}_l$ are those taken by the mouse on the left. Notice that we have only 3 independent data; in fact, we have the constraint that the respective position of the two mice cannot change. This means that the mice should read always the same displacement along the line that joins the centers of the two sensors. In particular, if we place the mice as in Figure 3, we have that the x values measured by the two mice should be always equal: $\overline{x}_l = \overline{x}_r$. This redundancy will be used in Section III for error detection and reduction in case of wrong measurements.

We can compute how much the robot pose has changed in terms of Δx, Δy, and $\Delta\theta$. In order to compute the orientation variation $\Delta\theta$ we apply the cosine rule to the triangle made by the joining line between the two mice and the two radii between the mice and the center of their arcs (see Figure 4):

$$D^2 = r_r^2 + r_l^2 - 2\cos(\gamma) r_r r_l, \tag{5}$$

where r_r and r_l are the radii related to the arc of circumferences described respectively by the mouse on the right and the mouse on the left, while γ is the angle between r_r and r_l. It is easy to show that γ can be computed by the absolute value of the difference between α_l and α_r (which can be obtained by the mouse measures using (3)): $\gamma = |\alpha_l - \alpha_r|$.

The radius r of an arc of circumference can be computed by the ratio between the arc length l and the arc angle θ. In our case, the two mice are associated to arcs under the same angle, which corresponds to the change in the orientation made by the robot, i.e. $\Delta\theta$ (see Figure 3). It follows that:

$$r_l = \frac{l_l}{|\Delta\theta|} \tag{6}$$

$$r_r = \frac{l_r}{|\Delta\theta|}. \tag{7}$$

If we substitute (6) and (7) into (5), we can obtain the following expression for the orientation variation:

$$\Delta\theta = \frac{\sqrt{l_l^2 + l_r^2 - 2\cos(\gamma) l_l l_r}}{D} \cdot sign(\overline{y}_r - \overline{y}_l) \tag{8}$$

The movement along the x and y axes can be derived by considering the new positions reached by the mice (w.r.t. the reference system centered in the old robot position) and then computing the coordinates of their mid-point (see Figure 5). The mouse on the left starts from the point of coordinates (-$\frac{D}{2}$;0), while the mouse on the right starts from ($\frac{D}{2}$;0). The formulas for computing their coordinates at the end of the sampling period are the following:

$$\begin{aligned}
x'_r &= r_r \left(\sin(\alpha_r + \Delta\theta) - \sin(\alpha_r)\right) sign(\Delta\theta) + \frac{D}{2} \\
y'_r &= r_r \left(\cos(\alpha_r) - \cos(\alpha_r + \Delta\theta)\right) sign(\Delta\theta) \\
x'_l &= r_l \left(\sin(\alpha_l + \Delta\theta) - \sin(\alpha_l)\right) sign(\Delta\theta) - \frac{D}{2} \\
y'_l &= r_l \left(\cos(\alpha_l) - \cos(\alpha_l + \Delta\theta)\right) sign(\Delta\theta).
\end{aligned}$$

From the mice positions, we can compute the movement executed by the robot during the sampling time with respect to the reference system centered in the old pose using the following formulas:

$$\Delta x = \frac{x'_r + x'_l}{2} \tag{9}$$

$$\Delta y = \frac{y'_r + y'_l}{2}. \tag{10}$$

The absolute coordinates of the robot at time $t+1$ $(X_{t+1}, Y_{t+1}, \Theta_{t+1})$ can thus be computed by knowing the absolute coordinates at time t and the relative movement carried out during the period $(t; t+1]$ $(\Delta x, \Delta y, \Delta\theta)$ through these equations:

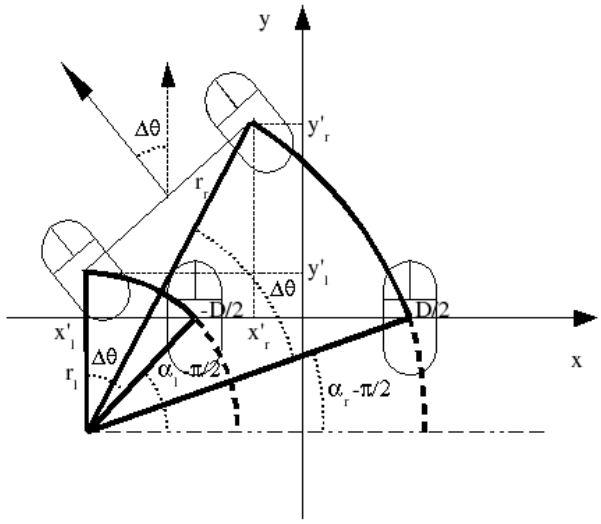

Fig. 5. The movement made by each mouse

$$\begin{aligned}
X_{t+1} &= X_t + \sqrt{\Delta x^2 + \Delta y^2} \cos\left(\Theta_t + \arctan\left(\frac{\Delta y}{\Delta x}\right)\right) \\
Y_{t+1} &= Y_t + \sqrt{\Delta x^2 + \Delta y^2} \sin\left(\Theta_t + \arctan\left(\frac{\Delta y}{\Delta x}\right)\right) \\
\Theta_{t+1} &= \Theta_t + \Delta\theta.
\end{aligned}$$

III. Sensor Error Detection and Reduction

In the introduction, we have mentioned the fact that odometry is affected by two kind of errors: *systematic* and *non-systematic*.

A. Systematic Errors Reduction through Calibration

In [**?**], we analyzed the systematic errors that can affect our system and proposed a calibration procedure in order to correct them.

The systematic errors that can affect our odometric sensor are:

- imperfections in the measurements of the positions and orientations of the two mice with respect to the robot;
- the resolution of the mouse, which depends from the surface on which the robot must travel;
- different resolutions of the two mice.

Our odometric system needs to know the value of some parameters related to the positioning of the two mice (see Figure 6): the distance between the two mice D, the orientation of the two mice σ_l and σ_r w.r.t. the robot heading, and the angle δ between the robot heading and the direction orthogonal to the mice joining line. If these parameters are not correctly estimated, systematic errors will be introduced; for a detailed description of the calibration procedure, refer to [**?**].

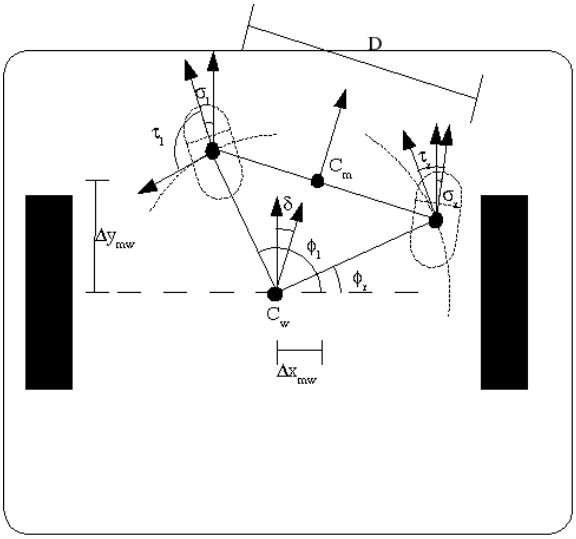

Fig. 6. Two mice fixed under a mobile robot. This figure points out all the parameters that we must estimate in order to use odometry with two mice.

B. Non-Systematic Errors Reduction

Also this odometric sensor is affected by non-systematic errors. In fact, the resolution of an optical mouse is related to the characteristics of the floor on which the robot is moving. If the surface is too homogeneous the mouse returns an underestimate of the actual movement. Furthermore, an underestimate may occur whenever the distance between the mouse and the floor becomes too large.

Since the parameters required for estimating the robot pose (according to our hypotheses) are three and the two mice give four readings, we can exploit the redundancy of the input data in order to detect if they are consistent with the model. This can be used to detect non-systematic errors in mice readings due to uneven surface or homogeneous areas. To detect such errors, we can use the constraint that the distance between the two mice has to be constant, which implies that the projections of the movement vectors of the two mice on their joining line ($\overrightarrow{v}_r, \overrightarrow{v}_l$) have to be equal (see Figure 7):

$$l_l \cos(\alpha_l + \beta_l) = l_r \cos(\alpha_r + \beta_r), \tag{11}$$

where $\beta_l = \sigma_l - \delta$ and $\beta_r = \sigma_r - \delta$ are the angles between the x-axes of the mice and their joining line estimated during the calibration procedure [**?**]. If the equality of (11) is not verified it means that one or more of the mice readings are erroneous. On the other hand, if the constraint is verified we cannot assert that the input data are correct, but only that they satisfy the model.

Since there is only one constraint, once we detect an error, we cannot know which of the four measures are wrong. Nevertheless, if we make some hypotheses on the kind of errors which affect the mice readings, we can reduce the error. In general, a mouse measure is never greater than the movement actually performed by the mouse. This implies that the errors on the input data can

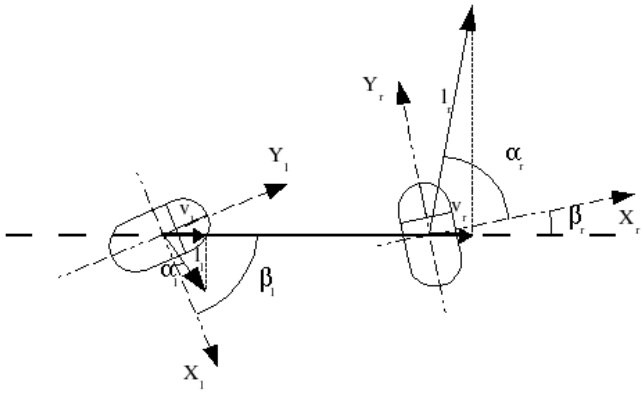

Fig. 7. In order to respect the distance constraint between the two mice it must be $v_l = v_r$

be only negative:

$$\begin{aligned}
\overline{x}_r &= x_r + \epsilon_{x_r}, \quad \epsilon_{x_r} \leq 0 && (12)\\
\overline{y}_r &= y_r + \epsilon_{y_r}, \quad \epsilon_{y_r} \leq 0 && (13)\\
\overline{x}_l &= x_l + \epsilon_{x_l}, \quad \epsilon_{x_l} \leq 0 && (14)\\
\overline{y}_l &= y_l + \epsilon_{y_l}, \quad \epsilon_{y_l} \leq 0. && (15)
\end{aligned}$$

The reason for this is that, typically, the errors made by an optical mouse are caused by a change in the distance between the mouse and the ground or by a surface which is homogeneous. In these cases, it can happen that during the sampling time t the mouse does not perceive the actual movement for a time $t' \leq t$. Since we made the hypothesis that during the sampling time the translational and rotational velocities of the robot are constant, it follows that also the velocities of the mouse along its axes ($\dot{x}$ and $\dot{y}$) are constant. This implies that the readings of a mouse are:

$$\begin{aligned}
\overline{x} &= \dot{x} \cdot (t - t') && (16)\\
\overline{y} &= \dot{y} \cdot (t - t'), && (17)
\end{aligned}$$

which allow us to correlate the errors in the following way:

$$\epsilon_y = \dot{y} \cdot t' = \frac{\overline{y}}{\overline{x}} \cdot \dot{x} \cdot t' = \frac{\overline{y}}{\overline{x}} \cdot \epsilon_x. \tag{18}$$

From (18) it follows that the errors affect only the measure of the length of the path covered by the mice (l_l and l_r), and not the angle with which they travel along their trajectory (α_l and α_r):

$$\begin{aligned}
\arctan\left(\frac{\overline{y} - \epsilon_y}{\overline{x} - \epsilon_x}\right) &= \arctan\left(\frac{\overline{y} - \frac{\overline{y}}{\overline{x}}\epsilon_x}{\overline{x} - \epsilon_x}\right)\\
&= \arctan\left(\frac{\overline{y}\left(1 - \frac{\epsilon_x}{\overline{x}}\right)}{\overline{x}\left(1 - \frac{\epsilon_x}{\overline{x}}\right)}\right)\\
&= \arctan\left(\frac{\overline{y}}{\overline{x}}\right) && (19)
\end{aligned}$$

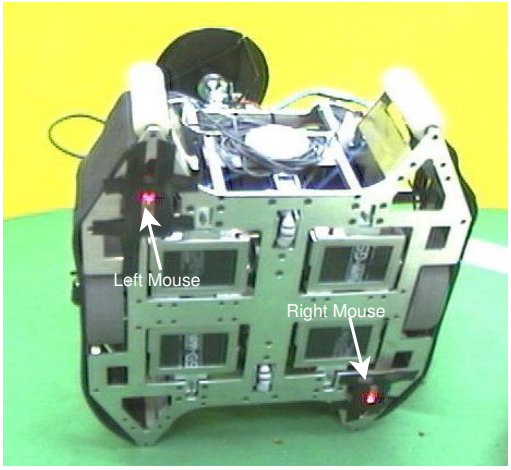

Fig. 8. The errors measured in the position (a) and heading (b) with and without the error reduction procedure

In this way, we can assume that $\epsilon_{\alpha_l} = \epsilon_{\alpha_r} = 0$, so that we have decreased the number of error variables from four to two (ϵ_{l_r} and ϵ_{l_l}) which must be less than or equal to zero, and, considering (11), are bound by:

$$(\bar{l}_l - \epsilon_{l_l})\cos(\alpha_l + \beta_l) = (\bar{l}_r - \epsilon_{l_r})\cos(\alpha_r + \beta_r). \quad (20)$$

In order to estimate the values of these two errors we use the following theorem:

Theorem 1: If the constraint expressed in (11) is not respected, we are sure (under the hypotheses we have made) that the mouse associated to the projection with the shortest magnitude is affected by some error. For instance, if we suppose that the mouse on the left has a shortest projection, the following holds:

$$|\bar{l}_l \cos(\alpha_l + \beta_l)| < |\bar{l}_r \cos(\alpha_r + \beta_r)| \Rightarrow \epsilon_{l_l} \neq 0 \quad (21)$$

Proof: Suppose that the deduction of (21) is not correct, so that $\epsilon_{l_l} = 0$. So we can derive the expression for ϵ_{l_r}:

$$\epsilon_{l_r} = \bar{l}_r - \bar{l}_l \frac{\cos(\alpha_l + \beta_l)}{\cos(\alpha_r + \beta_r)},$$

which according to (20) and the assumption of (21) implies $\epsilon_{l_r} > 0$, that is an absurd. ■

We assume that the mouse with the largest projection is not affected by errors, and correct the measure of the other one. So, if $|\bar{l}_l \cos(\alpha_l + \beta_l)| < |\bar{l}_r \cos(\alpha_r + \beta_r)|$ is true, we estimate the following errors:

$$\begin{cases} \epsilon_{l_r} & = & 0 \\ \epsilon_{l_l} & = & \bar{l}_l - \bar{l}_r \frac{\cos(\alpha_r+\beta_r)}{\cos(\alpha_l+\beta_l)} \end{cases} \quad (22)$$

In other words, if at least one mouse is not affected by errors, we can correct the errors of the other mouse, otherwise we can only reduce the erroneous readings of one mouse.

TABLE I

THE PARAMETERS ESTIMATED WITH THE CALIBRATION PROCEDURE

$\hat{k}_l$	$425cpi$	$\pm 0.97\%$
$\hat{k}_r$	$425cpi$	$\pm 0.64\%$
$\hat{\sigma}_l$	0.2^o	$\pm 0.12\%$
$\hat{\sigma}_r$	180.1^o	$\pm 0.09\%$
$\hat{D}$	$393mm$	$\pm 1.09\%$
$\hat{\delta}$	45.5^o	$\pm 1.02\%$
$\hat{\Delta x}_{wm}$	$-8mm$	$\pm 1.13\%$
$\hat{\Delta y}_{wm}$	$-7mm$	$\pm 1.22\%$

IV. EXPERIMENTAL RESULTS

In order to validate the error reduction method proposed in Section III-B, we take two USB optical mice featuring the Agilent ADNS-2051 sensor, which can be commonly purchased in any commercial store. We fix the mice to the robot body, positioning them on the opposite side of the robot diagonal (see Figure 8), facing in the opposite direction, and taking care of making them stay in contact with the ground. We made our experiments on a carpet, like those used in the RoboCup Middle Size League. In order to identify the parameters of the odometric sensor, we performed the calibration procedure described in the previous section; the values of the parameters estimated through this process are reported in Table I. Parameters k_l and k_r represent the mice resolutions and other parameters are the ones described in Section III-A.

We tested the method on the simple trajectory denoted by the solid line in Figure 9. In this experiment the robot has travelled to and fro along 1 meter straight trajectory. To simulate a non systematic error in the measurements we placed a reflective tape on the ground at 40 cm from the robot starting position to introduce missing readings. The dashed line in Figure 9(a) reports the estimated trajectory with no error detection and correction while the dotted line represents the estimated trajectory using the error reduction method. In Figure 9(b) we report the heading data related to the same experiment.

In this experiments, never happens that two mice are at the same time on the reflective tape. Thus we have always a mouse with reliable readings. As you can notice, the missing of readings introduce a severe error in the robot heading and this can be effectively detected and reduced by the proposed procedure.

V. DISCUSSION & CONCLUSION

The fundamental idea of dead reckoning as the integration of incremental motion information over time, which leads inevitably to the unbounded accumulation of errors, has been thoroughly investigated in literature. Specifically, orientation errors will cause large lateral position errors, which increase proportionally with the distance traveled by the robot. To address this issue, there have been a lot of work in this field for systematic error measurement, comparison and correction [**?**] especially for differential drive kinematics.

First works in odometry error correction were done by using and external compliant linkage vehicle pulled by the

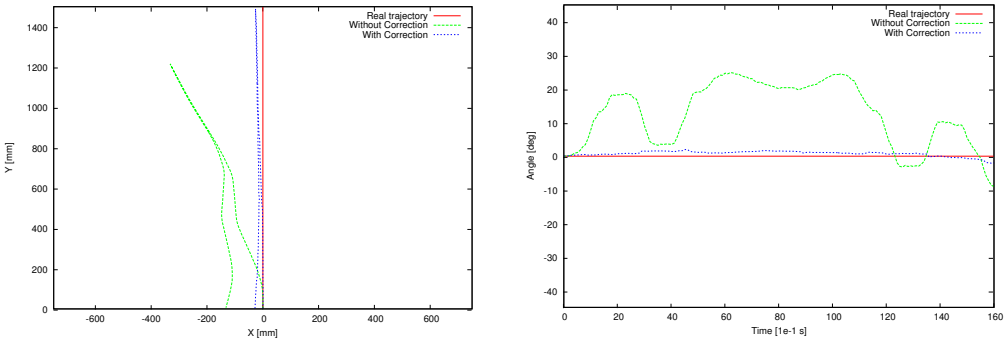

(a) (b)

Fig. 9. The errors measured in the position (a) and heading (b) with and without the error reduction procedure

mobile robot. Being pulled this vehicle does not suffer from slipping and the measurement of its displacing can be used to correct pulling robot odometry [?]. In [?] the authors propose a practical method for reducing, in a typical differential drive mobile robot, incremental odometry errors caused by kinematic imperfections of mobile encoders mounted onto the two drive motors.

Little work has been done for different kinematics like the ones based on omnidirectional wheels. In these cases, slipping is always present during the motion and classical shaft encoder measurement leads to very large errors. In [?] the Persia RoboCup team proposes a new odometric system which was employed on their full omnidirectional robots. In order to reduce non-systematic errors, like those due to slippage during acceleration, they separate odometry sensors from the driving wheels. In particular, they have used three omnidirectional wheels coupled with shaft encoders placed 60° apart of the main driving wheels. The odometric wheels are connected to the robot body through a flexible structure in order to minimize the slippage and to obtain a firm contact of the wheels with the ground. Also this approach is independent from the kinematics of the robot, but its realization is quite difficult and, again, it is affected by (small) slippage problems.

An optical mouse was used in the localization system presented in [?]. In their approach, the robot is equipped with an analogue compass and an optical odometer made out from a commercially available mouse. The position is obtained by combining the linear distance covered by the robot, read from the odometer, with the respective instantaneous orientation, read from the compass. The main drawback of this system is due to the low accuracy of the compass which results in another source for systematic errors.

Being odometry inevitably affected by the unbounded accumulation of errors (in particular, orientation errors will cause large position errors, which increase proportionally with the distance travelled by the robot) there are several works that propose methods for fusing odometric data with absolute position measurements to obtain more reliable position estimation [?], [?]. However, despite its limitations, a reliable odometry system providing good short-term accuracy simplifies the navigation task and this is the reason we have presented this new dead reckoning sensor based on a pair of optical mice.

As we said, the main advantages of using our odometric sensor are good performances w.r.t. the two main problems that affect dead reckoning sensors: slipping and crawling. Due to its characteristics, the proposed sensor can be successfully applied with many different robot architectures, being completely independent from the specific kinematics. In particular, we have developed it for our omnidirectional Robocup robots, which will be presented at Robocup 2004 and we are going to integrate in on our self-localization framework MUREA [?]. In this paper, we have shown how the use of two mice can exploit its redundant information for the detection and the reduction of measure errors, thus making this cheap odometric sensor very accurate and robust to several error sources that badly affect other dead reckoning systems.

REFERENCES

[1] P. Amini, M. D. Panah, and H. Moballegh. A new odometry system to reduce asymmetric errors for omnidirectional mobile robots. In *RoboCup 2003: Robot Soccer World Cup VII*, 2003.

[2] A. Bonarini, M. Matteucci, and M. Restelli. A kinematic-independent dead-reckoning sensor for indoor mobile robotics. In *Proceedings of the International Conference on Intelligent Robots and Systems*.

[3] A. Bonarini, M. Matteucci, and M. Restelli. Dead reckoning for mobile robots using two optical mice. In *Proceedings of the* 1th *International Conference on Informatics in Control, Automation and Robotics*, volume 2, pages 87–94, 2004.

[4] J. Borenstein. Internal correction of dead-reckoning errors with the compliant linkage vehicle. *Journal of Robotic Systems*, 12(4):257–273, April 1995.

[5] J. Borenstein and L. Feng. Measurement and correction od systematic odometry errors in mobile robots. *IEEE Transactions on Robotics and Automation*, 12(6):869–880, December 1996.

[6] F. Chenavier and J. Crowley. Position estimation for a mobile robot using vision and odometry. In *Proceedings of IEEE International Conference on Robotics and Automation*, pages 2588–2593, Nice, France, May 12–14 1992.

[7] I. Cox. Blanche - an experiment in guidance and navigation of an autonomous mobile robot. *IEEE Transactions on Robotics and Automation*, 7(3):193–204, 1991.

[8] M. Restelli, D. G. Sorrenti, and F. M. Marchese. Murea: a multi-resolution evidence accumulation method for robot localization in known environments. In *Proceedings of IROS 2002*, pages 415–420, Piscayaway, NJ, 2002. IEEE Computer press.

[9] F. M. Santos, V. F. Silva, and L. M. Almeida. A robust self-localization system for a small mobile autonomous robot. In *Preceedings of ISRA*, 2002.